Dual 555 Timer Police Siren LED Flasher Circuit

This project demonstrates a police-style siren LED flasher built using two NE555 timer ICs in an astable configuration. The circuit generates alternating pulses that simulate the flashing pattern of emergency vehicle lights.

The first 555 timer is configured to produce a low-frequency oscillation, which controls the switching behavior of the second 555 timer operating at a higher frequency. This combination creates a dynamic flashing effect across multiple LEDs.

Transistors are used as switching elements to drive the LED pairs efficiently, while resistors and capacitors determine the timing intervals and brightness levels. The circuit is powered by a 9V battery, making it portable and suitable for practical demonstrations.

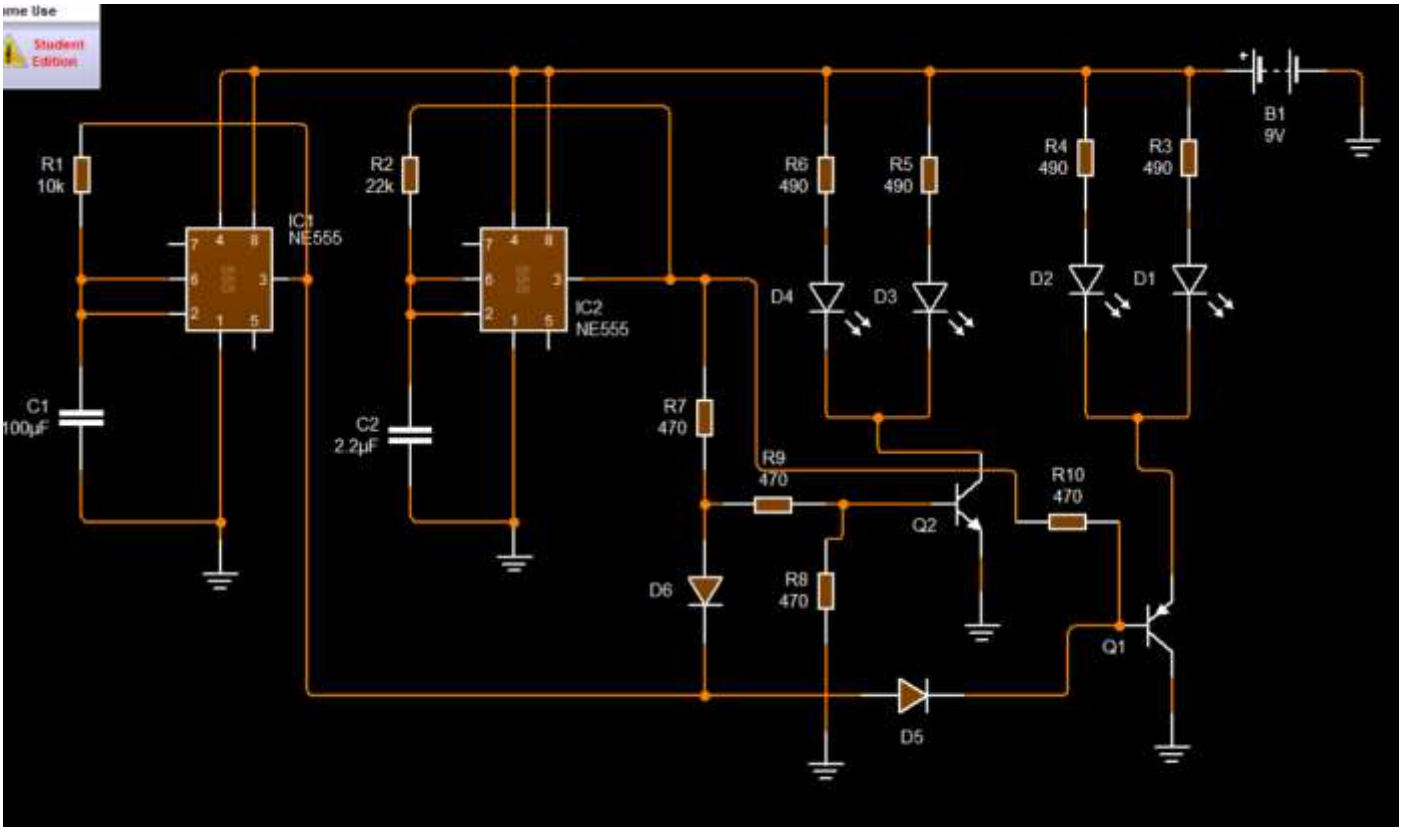

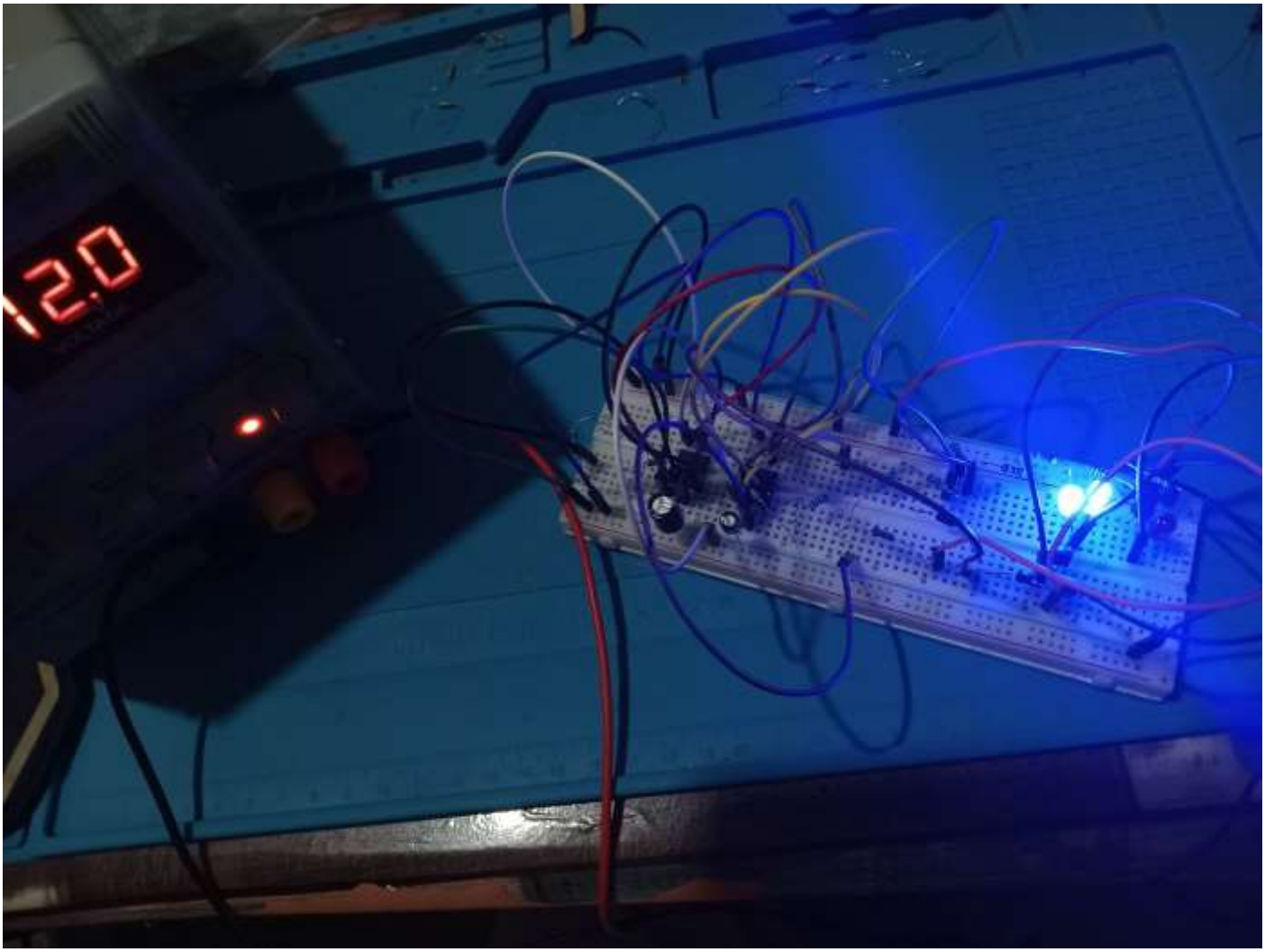
12.0